SYSTEM WIRING DIAGRAMS
Cruise Control Circuit, W/ Electronic Acceleration
1992 Mercedes-Benz 400SE
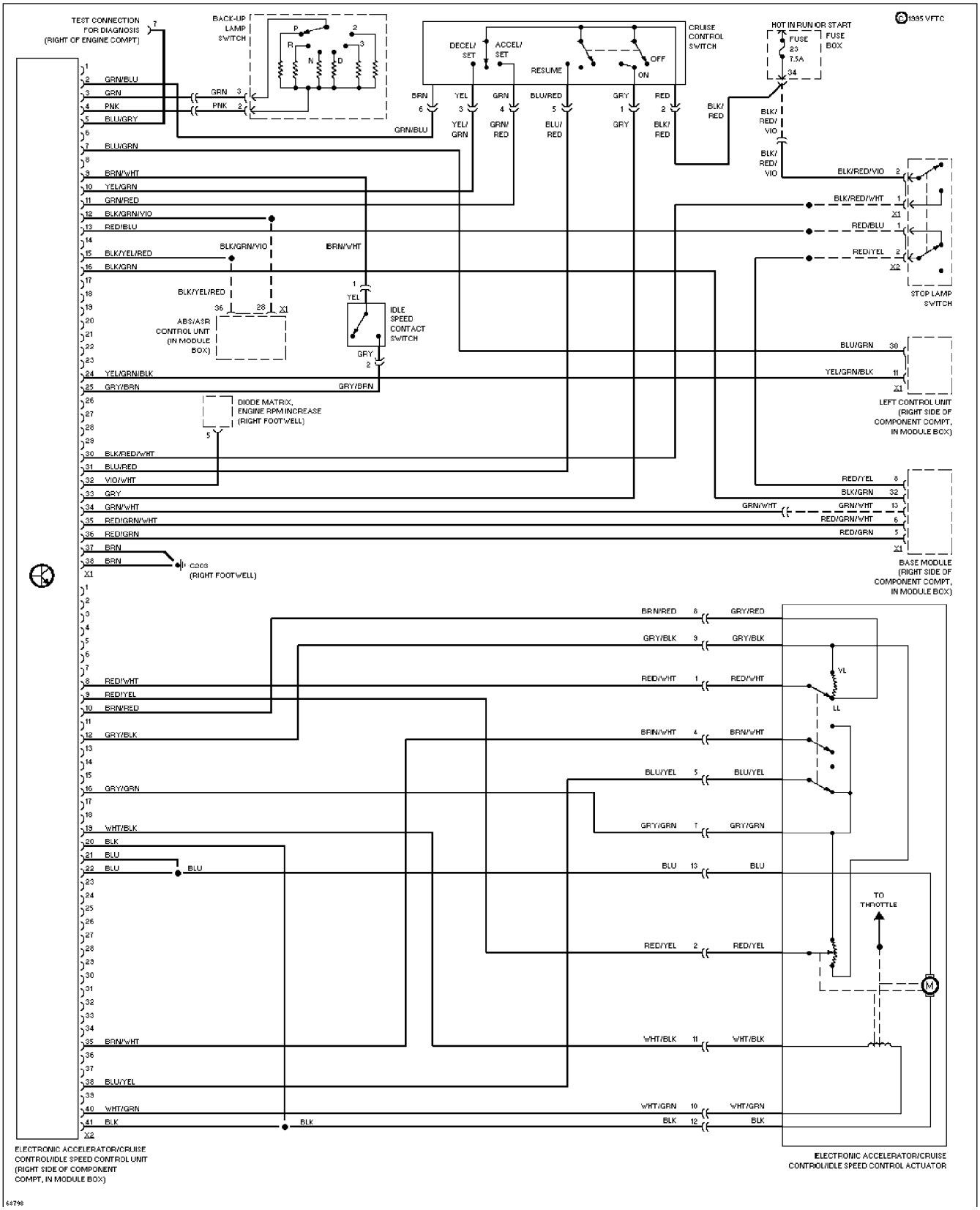
For DIAKOM-AUTO http://www.diakom.ru Taganrog support@diakom.ru (8634)315187
Copyright © 1998 Mitchell Repair Information Company, LLC
Thursday, November 30, 2000 05:38PM